DocuSign Envelope ID: 683A808E-0B0B-4CC7-833E-E2247A5302C8

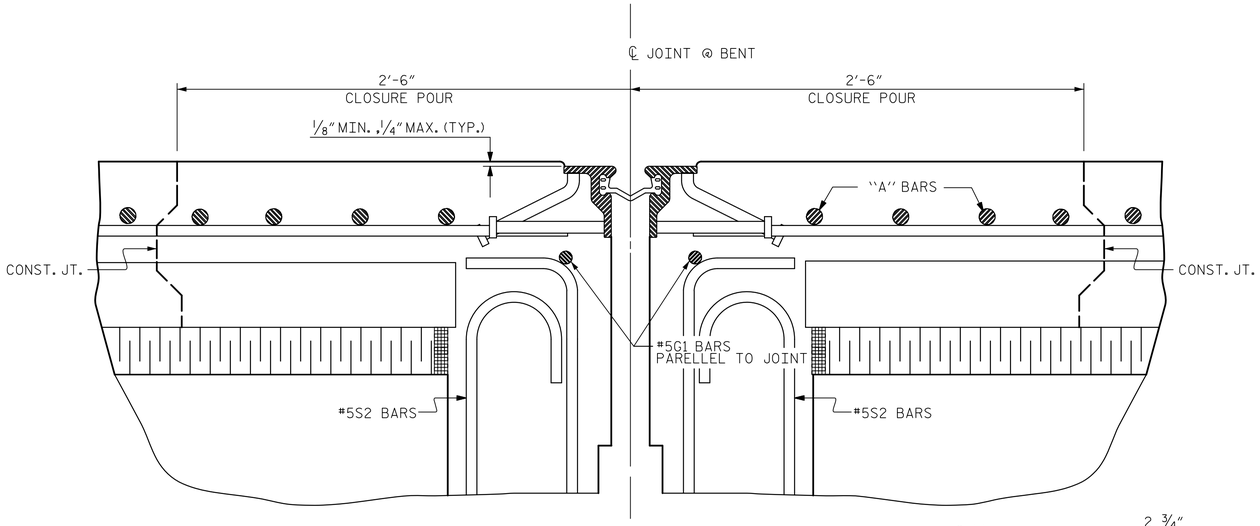

STRIP SEAL DETAILS

SECTION NORMAL TO JOINT AT BENT - CONCRETE SUPERSTRUCTURE

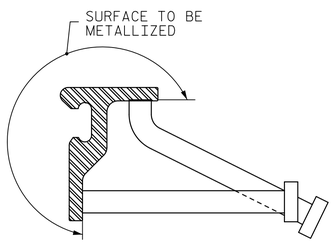

STRIP SEAL ASSEMBLY

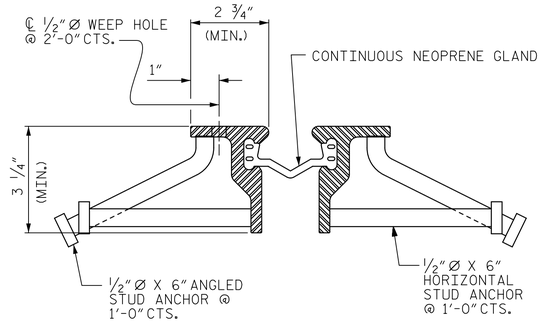

TYPICAL SECTION THRU JOINT

GENERAL NOTES

1. COVER PLATES AND STEEL RETAINER RAILS SHALL CONFORM TO AASHTO M270 GRADE 36 OR GRADE 50W STEEL. COVER PLATE BOLTS SHALL CONFORM TO ASTM F593 TYPE 304 STAINLESS STEEL. WASHERS SHALL CONFORM TO ASTM F844 EXCEPT THEY SHALL BE MADE FROM ALLOY 304 STAINLESS STEEL. ALL STUD ANCHORS SHALL CONFORM TO AASHTO M169, GRADES 1010 THRU 1020 OR APPROVED EQUAL. ALL CONCRETE INSERTS SHALL BE CLOSED-END AND SHALL CONFORM TO AASHTO M169, GRADE 12L14. TENSILE CAPACITY SHALL BE 3000 LBS. MIN.
2. GLAND SHALL BE CONTINUOUS THROUGHOUT THE JOINT.
3. SHOP DRAWINGS SHALL INCLUDE DETAILS OF THE SHOP WELDED SPLICE OF THE STEEL RETAINER RAIL AT THE UPTURN IN THE BARRIER RAIL.
4. CLOSED END FERRULES AND STUD ANCHORS SHALL BE SHOP WELDED AND ALL HOLES SHALL BE SHOP DRILLED AS SHOWN ON PLANS. STUD ANCHORS SHALL BE ELECTRIC ARC END WELDED WITH COMPLETE FUSION.
5. SURFACES COMING IN CONTACT WITH NEOPRENE SHALL BE GROUND SMOOTH PRIOR TO METALLIZING.
6. UPON COMPLETION OF SHOP FABRICATION, THE STEEL PARTS SHALL BE METALLIZED AS SHOWN IN "STRIP SEAL ASSEMBLY." SEE SPECIAL PROVISIONS FOR THERMAL SPRAYED COATINGS (METALLIZATION).
7. AT FIELD SPLICE LOCATIONS, THE ENDS OF THE STEEL RETAINER RAILS SHALL BE CUT PARALLEL TO THE BRIDGE CENTERLINE FOR SKEWS LESS THAN 80° AND GREATER THAN 100°. FINISHED FIELD WELDS SHALL BE GROUND SMOOTH AND COATED WITH A MINIMUM THICKNESS OF 4 DRY MILS OF ZINC-RICH PAINT IN ACCORDANCE WITH THE STANDARD SPECIFICATIONS.
8. FIELD SPLICES OF STEEL RETAINER RAILS SHALL BE KEPT TO A MINIMUM. THE CONTRACTOR SHALL FURNISH DETAILED PLANS SHOWING PROPOSED SPLICE LOCATIONS FOR APPROVAL. STEEL RETAINER RAILS SHALL NOT BE SHIPPED IN LENGTHS EXCEEDING 20' UNLESS APPROVED BY THE ENGINEER.
9. INSTALLED STEEL RETAINER RAILS SHALL FOLLOW THE ROADWAY SLOPE.
10. AFTER THE CONCRETE HAS BEEN CAST ON BOTH SIDES OF THE JOINT, REMOVE ANY EXCESS CONCRETE THAT COMES OUT OF THE WEEP HOLES. ANY DAMAGED STEEL SHALL BE COATED WITH 4 DRY MILS OF ZINC-RICH PAINT IN ACCORDANCE WITH THE STANDARD SPECIFICATIONS.
11. FOR STRIP SEALS, SEE SPECIAL PROVISIONS.
12. THE CONTRACTOR MAY, AT HIS OPTION, USE ADHESIVELY ANCHORED ANCHOR BOLTS IN PLACE OF CONCRETE INSERTS FOR COVER PLATES. THE YIELD LOAD OF THE 3/4" DIA. BOLT IS 10 KIPS. FIELD TESTING OF THE ADHESIVE BONDING SYSTEM IS NOT REQUIRED.

MOVEMENT AND SETTING AT JOINT

BENT NO.	SKEW ANGLE	TOTAL MOVEMENT (ALONG ℄ RDWY)	PERPENDICULAR JOINT OPENING AT 45° F	PERPENDICULAR JOINT OPENING AT 60° F	PERPENDICULAR JOINT OPENING AT 90° F
2	90°00'00"	1 5/16"	2"	1 3/4"	1 5/16"
3	90°00'00"	1 5/16"	2"	1 3/4"	1 5/16"
4	90°00'00"	1 5/16"	2"	1 3/4"	1 5/16"
5	90°00'00"	1 5/16"	2"	1 3/4"	1 5/16"
6	90°00'00"	1 3/4"	2 1/4"	1 15/16"	1 5/16"

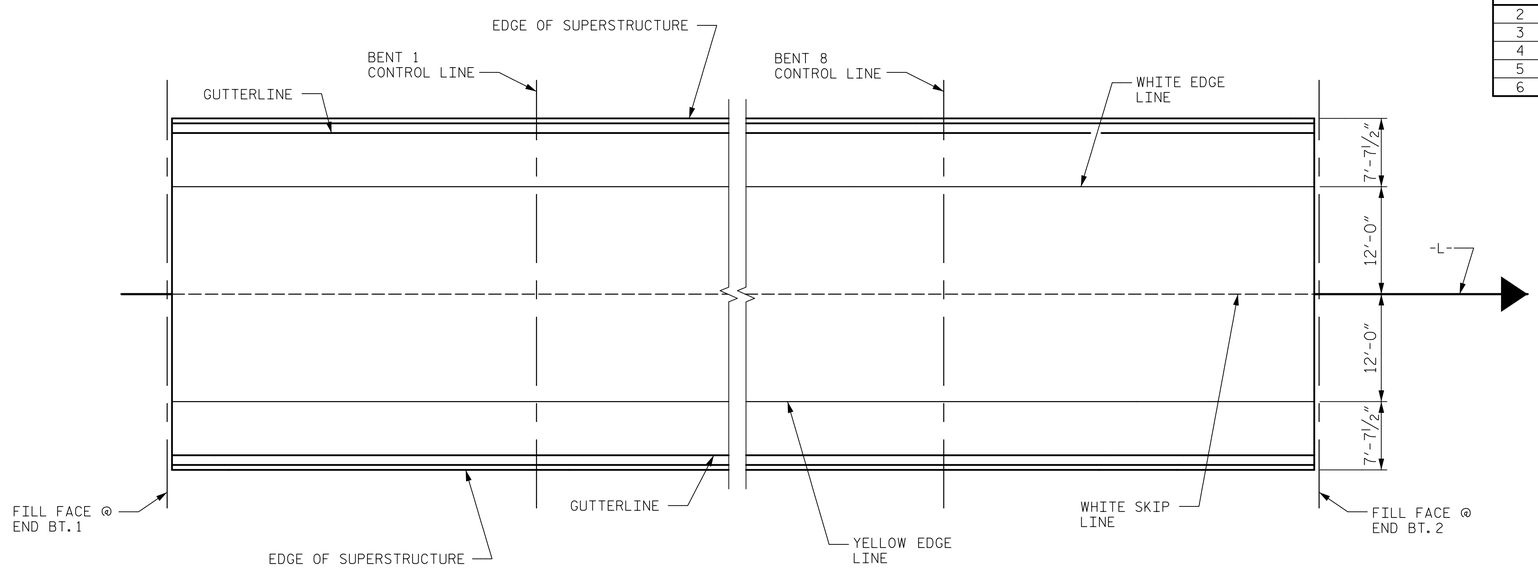

PAVEMENT MARKING ALIGNMENT

PROJECT NO. B-4974

STANLY/MONTGOMERY COUNTY

STATION: 339+86.39 -L-

SHEET 1 OF 2

AECOM
AECOM TECHNICAL SERVICES, INC.
701 CORPORATE CENTER DRIVE, SUITE 475
RALEIGH, NC 27607
(919) 854-6200 www.aecom.com
AECOM License No. F-0342

Documents Not Considered Final Unless All Signatures Completed

NORTH CAROLINA PROFESSIONAL SEAL 035062 ENGINEER JOHN E. SLOAN
8/30/2017

STATE OF NORTH CAROLINA
DEPARTMENT OF TRANSPORTATION
RALEIGH

SUPERSTRUCTURE

STRIP SEAL
EXPANSION JOINT
DETAILS

REVISIONS						
NO.	BY:	DATE:	NO.	BY:	DATE:	
1			3			
2			4			

SHEET NO. S-51

TOTAL SHEETS 148

ASSEMBLED BY : T.B. STUMP		DATE : 8/2017	
CHECKED BY : M.K. TOM		DATE : 10/2017	
DRAWN BY : ELR 5/92	REV. 8/16/99R	RAL/LES	
CHECKED BY : TKK 5/92	REV. 5/1/06	TLA/GM	
	REV. 10/1/11	MAA/GM	

STD. NO. SSJ1

DATE: 8/28/2018
TIME: 2:35:01 PM
USER: matt.tom
DGN: \\USRAL3TJ001\aecomnet.com\Data\Projects\60536253\900_Work\910_CADD\0_NCDOT_TIP\Structures\04 Drawings\401_I03_B4974_SMU_SSEJ.dgn